BENQ EX3210U
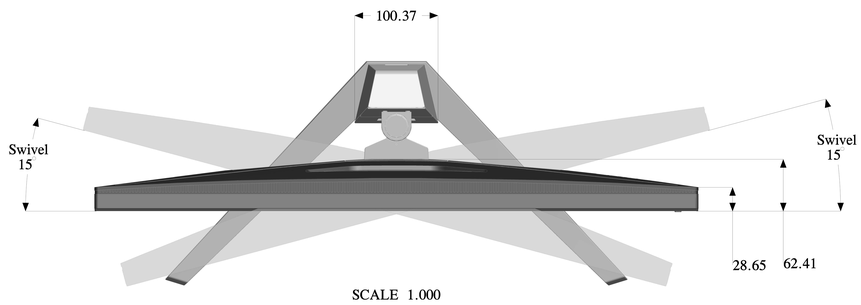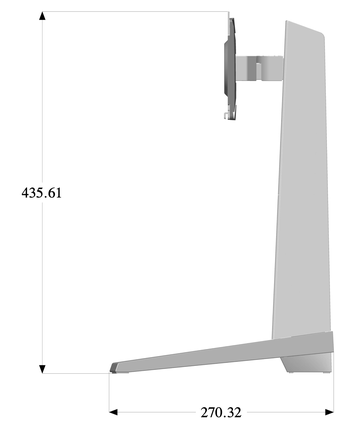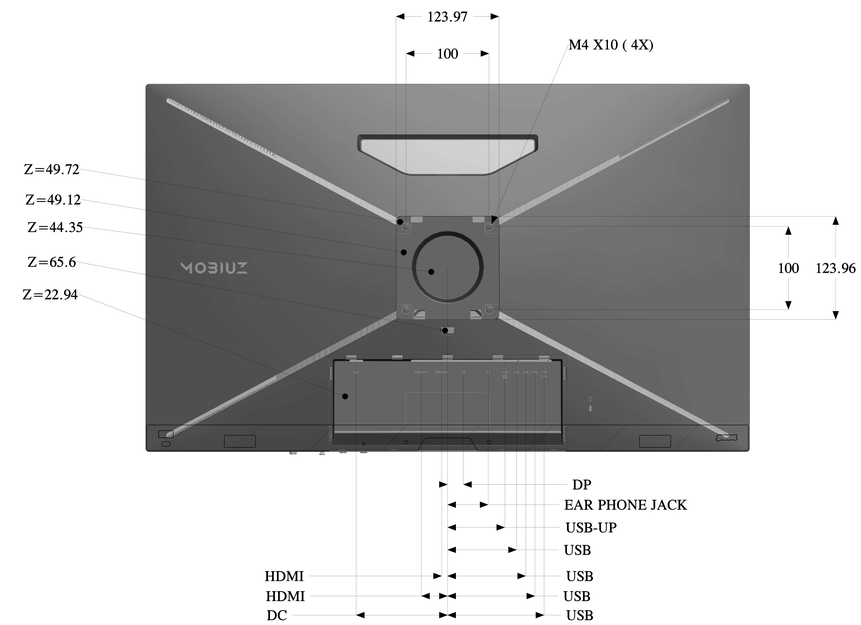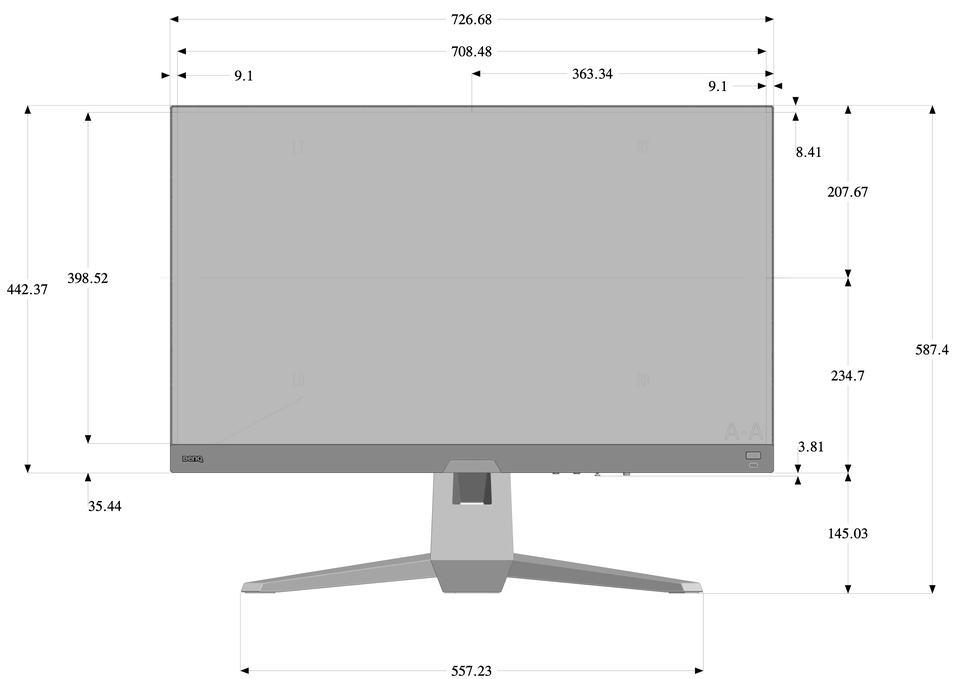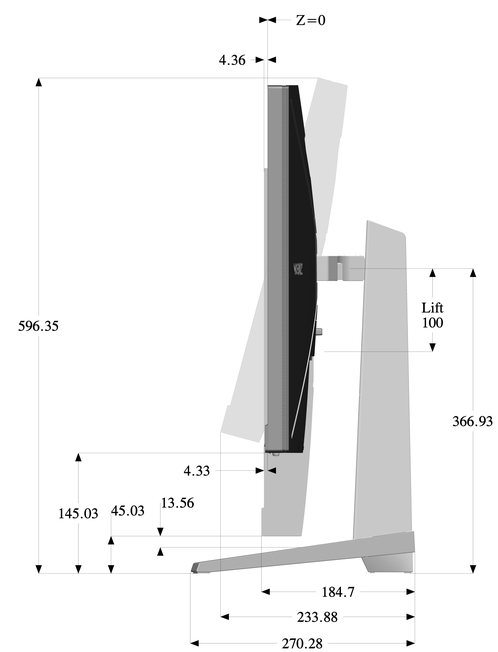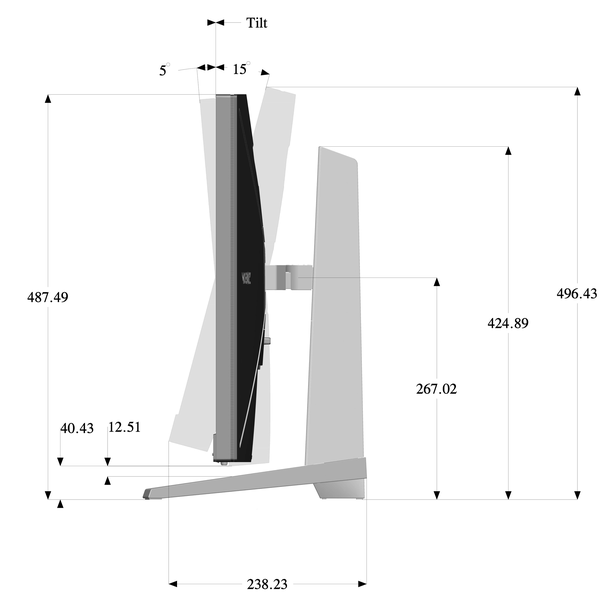
Unit : mm
Dimension : Norminal
Drawing : Not to Scale